THE CORPORATION OF THE TOWNSHIP OF SOUTHWOLD

- A G E N D A -

Monday May 12, 2025

REGULAR MEETING OF COUNCIL
7:00 p.m., Council Chambers, Fingal/Via Video Link

---

1. CALL TO ORDER

2. ADDENDUM TO AGENDA

3. DISCLOSURE OF PECUNIARY INTEREST

4. ADOPTION AND REVIEW OF MINUTES

(a) Draft Minutes of Regular Council Meeting of April 28, 2025
(b) Draft Minutes of the Southwold 175 Committee Meeting of April 23, 2025
(c) Draft Minutes of the Young at Heart Committee Meeting of April 24, 2025
(d) Draft Minutes of the Shedden Recreation and Keystone Complex Committee Meeting of April 24, 2025
(e) Draft Minutes of the Communities in Bloom Meeting of April 29, 2025

5. DELEGATION

6. DRAINAGE

7. PLANNING

8. REPORTS

(a) FIR 2025-05 Activity Report – April 2025
(b) IDS 2025-25 Activity Report – April 2025
(c) IDS 2025-26 Shady Lane Sidewalk Award
(d) IDS 2025-27 Iona Road Culvert Award
(e) CBO 2025-11 Committee Representation of Corsley Park
(f) CBO 2025-12 Activity Report – April 2025
(g) CBO 2025-13 Keystone Complex Electronic Sign
(h) CAO 2025-30 Activity Report – April 2025

9. CORRESPONDENCE

(a) Western Ontario Wardens Caucus Municipal Conference 2025
(b) Association of Municipalities of Ontario – Delegation Requests

10. BY-LAWS

(a) By-law No. 2025-32, being a by-law to repeal By-law No. 1996-18, being a by-law to license to regulate mobile food and refreshment vendors
(b) By-law No. 2025-33, being a by-law to confirm the resolutions and motions of the Council of the Township of Southwold, which were adopted on May 12, 2025

11. OTHER BUSINESS *(For Information Only)*

12. CLOSED SESSION

(a) A position, plan, procedure, criteria or instruction to be applied to any negotiations carried on or to be carried on by or on behalf of the municipality or local board (Section 239(2) (k)) –Township Facility Usage
(b) Personal matters about an identifiable individual, including municipal or local board employees (Section 239(2) (b)) and labour relations or employee negotiations; (Section 239(2) (d)) – HR and CUPE Matters

13. ADJOURNMENT:

NEXT REGULAR MEETING OF COUNCIL
Monday May 26, 2025 @ 7:00 P.M.
Council Chambers, Fingal/Via Video Link

THE CORPORATION OF THE TOWNSHIP OF SOUTHWOLD

MINUTES

Regular Council Meeting
Monday April 28, 2025
7:00 p.m. Council Chambers, Fingal, Shedden/Via Video Link

COUNCIL PRESENT: Mayor Grant Jones
Deputy Mayor Justin Pennings
Councillor John Adzija
Councillor Sarah Emons
Councillor Scott Fellows

ALSO PRESENT: Jeff Carswell, CAO/Clerk
Michele Lant, Director of Corporate Services/Treasurer
Aaron VanOorspronk, Director of Infrastructure & Development Services
Corey Pemberton, Director of Building & Community Services/Chief Building Official
June McLarty, Deputy Clerk

Mayor Jones called the meeting to order at 7:00 p.m.

ADDENDUM TO AGENDA: None

DISCLOSURES: None

ADOPTION OF MINUTES:

Council Minutes – Adopt

2025-130 Councillor Emons – Deputy Mayor Pennings

THAT the Minutes of the Regular Council Meeting of April 14th, 2025 are hereby adopted.

CARRIED

Committee Minutes – Review

2025-131 Councillor Adzija – Councillor Fellows

THAT Council has reviewed the minutes of the Southwold 175 Planning Committee Meeting of April 9, 2025.

CARRIED

DELEGATION:

7:00 p.m. – 7:05 p.m.

Building Code Act – Building Department Fees

Corey Pemberton, Director of Building & Community Services/Chief Building Official presented the changes to the fees for the Building Department. It was also noted that there was an error in the return policy in the new Building By-law. No refund shall result in the retention by the Township of Southwold of an amount less than the minimum permit value.

REPORTS:

CBO 2025-10 Building By-law Report

2025-132 Councillor Fellows – Councillor Emons

THAT draft By-law 2025-29, The Building Code By-law, be referred to the By- laws section of the Council Agenda for passage at the April 28, 2025 meeting; and,

THAT Council repeal By-law 2005-44.

CARRIED

CBO 2025-09 Mobile Food Vendor Policy

2025-133 Councillor Adzija – Deputy Mayor Pennings

THAT Council authorizes the operation of mobile food vendors at municipal facilities; and,

THAT this report be established as a "Standing Policy" governing Mobile Food Vendors looking to operate at municipal facilities; and,

THAT Council instruct staff to prepare and submit a By-law to repeal

By-law No. 96-18 for the May 12, 2025 Council meeting.

CARRIED

IDS 2025-24 County Cycling and Road Rationalization

2025-134 Councillor Fellows – Councillor Emons

THAT Council endorse the staff comments outlined in this report and direct the staff to present the Township of Southwold's comments on the County's draft Road Rationalization and Cycling Master Plans to County Council for consideration.

CARRIED

FIN 2025-14 Annual Repayment Limit

2025-135 Deputy Mayor Pennings – Councillor Adzija

THAT Council receive Report FIN 2025-14 re: 2025 Annual Repayment Limit for information.

CARRIED

Proposed Comprehensive User Fee Summary
The new user fees summary was presented to Council.

Elgin County- From the County Council Chambers – April 8, 2025
Mayor Jones presented this report to Council.

Elgin County – From the County Council Chambers – April 22, 2025
Mayor Jones presented this report to Council.

CORRESPONDENCE:

- Elgin Children's Foundation – Proclamation of June 7th, 2025 as LemonAID Day
- Fee Waiver Request Shawn Jackson Memorial Ball Tournament

June 7th, 2025 as LemonAid Day

2025-136 Councillor Fellows – Councillor Emons

THAT Council of the Township of Southwold declares June 7th, 2025 as LemonAID Day in the Township of Southwold.

CARRIED

Fee Waiver Request Shawn Jackson Memorial Ball Tournament

2025-137 Deputy Mayor Pennings – Councillor Adzija

THAT Council waive the fees for the Shawn Jackson Memorial Ball Tournament in the amount of $550.00 for the use of the Fingal Ball Park diamonds and pavilion on a date to be determined in June or July 2025 subject to no additional staff time.

CARRIED

BY-LAWS:

- By-law No. 2025-29, being a by-law to respecting Building, Demolition, Change of Use, Conditional Permits, Sewage Systems, Inspections and Fees and Deposits and to repeal By-law No. 2005-44, as amended.
- By-law No. 2025-30, being a by-law to establish User Fees and to repeal By-law No. 2021-73, as amended.
- By-law No. 2025-31, being a by-law to confirm the resolutions and motions of the Council of the Township of Southwold, which were adopted on April 28, 2025.

By-laws

2025-138 Councillor Emons – Deputy Mayor Pennings

THAT By-law Nos. 2025-29 and 2025-30 be read a first and second time, considered a third time and finally passed this 28th day of April, 2025.

CARRIED

CLOSED SESSION

2025-139 Deputy Mayor Pennings – Councillor Adzija

THAT Council of the Township of Southwold now moves again into a session of the meeting that shall be closed to the public at **7:50 p.m.** in accordance with Section 239 (2) of the Municipal Act, S.O. 2001, c. 25 for discussion of the following matters;

- A position, plan, procedure, criteria or instruction to be applied to any negotiations carried on or to be carried on by or on behalf of the municipality or local board (Section 239(2) (k)) – Township Facility Usage, Talbotville Parkland
- Personal matters about an identifiable individual, including municipal or local board employees (Section 239(2) (b)) and labour relations or employee negotiations; (Section 239(2) (d)) – HR and CUPE Matters

CARRIED

Adjournment of Closed Session

2025-140 Councillor Emons – Deputy Mayor Pennings

THAT Council of the Township of Southwold adjourns the Closed Session of the Regular Council meeting at **9:10 p.m.**

CARRIED

STAFF DIRECTION

Staff was directed by Council to the items that were discussed in the Closed Session.

Confirmation By-law

2025-141 Councillor Fellows – Deputy Mayor Pennings

THAT By-law No. 2025-31 be read a first and second time, considered read a third time and finally passed this 28th day of April, 2025.

CARRIED

ADJOURNMENT:

2025-142 Deputy Mayor Pennings – Councillor Adzija

THAT Council for the Township of Southwold adjourns this Regular meeting of Council at **9:11 p.m.** **CARRIED**

_____

Mayor
Grant Jones

_____

CAO/Clerk
Jeff Carswell

Southwold 175 Planning Committee Meeting Minutes

Wednesday April 23, 2025
Council Chambers, Fingal/Via Video Link
Time meeting started: 3:40 p.m.

Present: Mayor Grant Jones
Bill Aarts
Chris Cirella
Sofia Sinclair-Jones (virtually)
Sharon Lechner
June McLarty, Staff Resource

Regrets: Councillor Sarah Emons

1. **Call Meeting to Order and Welcome**

Mayor Jones called the meeting to order at 3:40 p.m.

2. **Approval of the Agenda**

Moved by: Chris Cirella **Seconded by: Bill Aarts**
That the agenda for the April 23rd , 2025 meeting be approved
Carried

3. **Approval of the April 9th, 2025, Minutes**

Moved by: Chris Cirella **Seconded by: Grant Jones**
That the minutes from the April 9th, 2025 meeting be approved.
Carried

4. **Event Planner Report**

Sharon provided an update on some potential sponsors. She provided a list of companies to provide alcohol at the event. She has also contact Alpha Sanitation regarding the rental of port-a-potties.

Moved by: Chris Cirella **Seconded by: Bill Aarts**
That Lauralynn Gibbons provide pony rides at a cost of $700.

Carried

5. **Planning for 2025**

Committee Member Reports on Action Items

a. **Sponsorship Packages**

Sharon provided an update on the sponsors that received as well as potential ones.

b. **Entertainment**

Sofia reported she is negotiating with the headliner.
Bill will reach out to Rob Burns regarding his costs.
Once we have the headliner confirmed we can do up a flyer.
More discussion is needed for the stage.

c. **Vendors**

Sharon provided a list of food vendors she has so far. A list of possible other food vendors was supplied.
Sharon will investigate obtaining an associate to help with obtaining vendors and organizing the artisan and food vendor portion of the event.

d. **Ticketing/Bracelets**

Moved by: Bill Aarts Seconded by: Sofia Sinclair-Jones
That we ordered 1500 of the Tyrek ¾ "sheeted solid wristband.

Carried

The wristbands will be used to the aged 19 plus to gain assess to the beer garden. No tickets for the event will be needed for anyone under the age of 3. More discussion on how people can obtain tickets will be discussed at the next meeting.

e. **Raffles/Contests**

The Township can't not obtain a lottery licence for a raffle.
A discussion was had to create a passport. Maybe a photo contest to winner some merchandise. More discussion at next meeting.

f. **Lapel Pins**

Deferred to the next meeting.

DRAFT

g. Volunteers

A flyer to recruit volunteers will be created. Committee are encouraged to add to the Google List where volunteers are needed.

6.0 2025 Event Budget

The new sponsors, pony rides and bracelets were added to the budget.

7.0 Use of Keystone Complex

The complex will be available to vendors who want an indoor space for products that may melt in the sun. The price for a 10x10 space would be $150.00

8.0 Other Business

No other business was discussed**.**

9.0 Adjournment and Next Meeting

RESOLVED that the meeting be adjourned at **4:52 p.m**. to meet again at **3:30 p.m.** on **Wednesday May 7, 2025.**

DRAFT

Southwold Young at Heart Committee Meeting Minutes

Thursday April 24, 2025
Southwold Keystone Complex, Shedden, ON
Time meeting started: 1:42 p.m.

Attendance: Sarah Emons, Mary-Lou Jones, Allan Bogart, Karen Auckland, Sharon Hinz, Ida Martin, Trudy Kanellis, Karen Olmstead and June McLarty

Regrets: Deb Logghe

1. **Call Meeting to Order and Welcome**
   Sarah called the meeting 1:42 p.m.

2. **Approval of the Agenda**
   Resolution No. 2025-06 Moved by: Trudy Kanellis
   Seconded by: Karen Auckland

   RESOLVED that the agenda of the April 24th, 2025 meeting of the Southwold Young at Heart Committee be approved

   DISPOSITION: Carried

3. **Approval of Minutes**
   Resolution No. 2025-07 Moved by: Sharon Hinz
   Seconded by: Karen Olmstead

   RESOLVED that the minutes of the March 6th, 2025 meeting of the Southwold Young at Heart Committee be approved.

   DISPOSITION: Carried

DRAFT

4. **Easter Lunch Wrap -up**

The Easter Lunch was hugely successful. The meals contained good portions and the dessert was great. Notifying the caterer well in advance of the meal date is greatly appreciated. The Committee should consider ordering some extras meals. If they are not spoken for, committee members will take them.

5. **Southwold 175 Calendar Contribution**

Resolution No. 2025-08 Moved by: Ida Martin
Seconded by: Sharon Hinz

RESOLVED that for advertising the Southwold Young at Heart Events in the Southwold 175 calendar a contribution of $500 will be paid towards the printing of the calendars.

DISPOSITION: Carried

6. **Nature Walk**

The nature walk will be held on May 29 at 2:00 p.m. at the Deer Ridge Conservation Area, 147 Glengariff Drive, Talbotville. Sarah will conduct a guided tour of the different plants that are in the conservation area. The walk will be approximately 45 minutes. Some walking sticks will be available for use during the walk.

7. **Future Events**

The Committee confirmed up the details for the Chocolate Chat and Desserts.

8. **Other Business**

No other business was discussed.

9. **Adjournment and Next Meeting**

Resolution No. 2025-09 Moved by: Karen Auckland
Seconded by: Mary-Lou Jones

RESOLVED that the meeting adjourn at **2:37 p.m**. to meet again at 1:30 p.m. on **June 12 ,2025** in Council

DRAFT

Chambers, Fingal.

DISPOSITION: Carried

DRAFT

Shedden Recreation & Keystone Complex Committee

April 24, 2025
Southwold Keystone Complex
35921 Talbot Line, Shedden
6:30 PM

DRAFT

Present: Councillor Scott Fellows
Councillor John Adzija
Sandy Annett – Rosy Rhubarb
Tiffany Duskocy – Triple C Saddle Club
Joanne Fisher – Triple C Saddle Club Alternate
Jesse Walker - Shedden Soccer
Brian Rieger – Shedden Tractor Pull
John Price - *Staff, Parks and Facilities Operator
Brittany Jessome - *Staff Resource

Also Present: Councillor Sarah Emons – Delegate
Len Lynch - Delegate

Regrets: Jim Carder – Fingal-Shedden and District Optimist Club
Don Miller – Fair Board
Shirley Longhurst – Fair Board
John Coleman – Ice Pad

1. Call to Order

Chair Scott Fellows called the meeting to order at 6:35 PM.

2. Approval of Agenda

MOVED: COUNCILLOR ADZIJA
SECONDED: JESSE WALKER

That the Shedden Recreation & Keystone Complex Committee hereby adopts the Agenda amended, to move Item 5.b to the beginning of the agenda.

DISPOSITION: CARRIED

3. Adoption of Minutes from March 20, 2025 Meeting

MOVED: SANDY ANNETT
SECONDED: JESSE WALKER

That the Shedden Recreation & Keystone Complex Committee hereby adopt the minutes of March 20, 2025, as circulated and printed.

DISPOSITION:CARRIED

4. Spring Walkthrough

Len Lynch and Councillor Sarah Emons were present to discuss the memorial forest area. Len provided a history on the implementation of the forest. Councillor Emons provided her expertise in biodiversity and encouraged the committee to consider having a qualified consultant complete a maintenance plan for the forested area.

The committee completed a walk-through of the grounds, including the complex, playground, pavilion, barn, horse ring, walking trail, and Corsley Park. Comments made during the walkthrough are noted in the Keystone Park and Ground Maintenance Concerns 2025 Spreadsheet attached.

5. Business Arising from Minutes

a. Electronic Sign

Staff advised that additional quotes are being obtained in line with our procurement policy. Staff will continue to provide updates via email as they become available.

DRAFT

b. Rosy Electrical Additions

Staff commented that Rosy Rhubarb representatives have been advised to contact Corey Pemberton, Director of Building & Community Services/CBO, to discuss details. Keith Orchard from the Rosy Rhubarb Committee has been informed to contact Corey.

c. Sunshade for Playground.

Staff are in support of Rosy Rhubarb representatives investigating the options for a sunshade and present to staff for consideration. Rosy Rhubarb has indicated this may be a possible budget item for their organisation to vote on for 2026.

d. Playground Bench

Staff have inspected the bench at the playground and have determined that the bench needs to be sanded and repainted, however the structural components are intact. Rosy Rhubarb has submitted an application for an additional bench at the playground.

6. New Business

a. Corsley Park Committee Representation Report

Councillor Fellows spoke on the report provided by the committee and by staff and the committee discussed thoughts about the recommendations. Shedden Soccer shared that with the challenge to obtain volunteers, removing them from the committee may result in lost volunteers, however they understood the logics behind the recommendations and supported them.

Brian Rieger made the motion to include an additional recommendation when presenting to Council, that would provide for the same Council Representative and Township Representative appointed to both the newly revised Keystone Complex Committee and the Parks Committee.

MOVED: BRAIN RIEGER
SECONDED: COUNCILLOR ADZIJA

THAT the Shedden Recreation & Keystone Complex Committee hereby adopt the recommendations made in the Committee Representation for Corsley Park report; AND

THAT the same Council representative and Township staff representative be appointed to both the Keystone Complex Committee and the Parks Committee.

DISPOSITION: CARRIED

DRAFT

7. Next Meeting and Adjournment

MOVED: BRAIN RIEGER
SECONDED: JESSE WALKER

That the Shedden Recreation & Keystone Complex Committee hereby adjourn at 8:57 pm, to meet again on September 25, 2025 at 7: 00 pm.

DISPOSITION: CARRIED

DRAFT

Location	Reported Deficiency	Recommended Resolution
Complex	Clamp missing from downspout on NE corner of Complex	Investigate & Repair
Complex	Screws on top of steel roof and popping out along the edge of the complex	Investigate & Repair
Grounds	Bench in gazebo inside the memorial forest has boards broken	Investigate & Repair if Needed
Grounds	Bees nests along pavilion eavestroughs	Remove Nests
Grounds	Ball Diamond is unmaintained and washrooms are unusable.	Investigate & Repair if Needed
Grounds	Garbage from Winterfest Fireworks located beside the basketball court	Remove Garbage
Grounds	Posts need replacement along guardrail of track to horse barn/ring	Investigate & Repair if Needed
Grounds	Triple C would like to move chute for horse ring. This would include removing/relocating a tree, and moving the gate and some posts to be centred to the ring	Investigate & Complete if approved

Corsley	Walking trail is uneven and has some washouts	Investigate & Repair if Needed
Corsley	Fertilizer Burn at goal post closest to swale/Union Road	Investigate & Repair if Needed
Corsley	Water pools in NE corener of soccer field	Investigate & Repair if Needed
Corsley	Water spigot on walkway to washrooms has heaved and is raised out of the ground significantly	Investigate & Repair if Needed
Corsley	Last electrical box on right hand side of pavilion, closest to playground, is missing a screw connecting to the post and is very loose	

MINUTES

CIB COMMITTEE
@ 10:30 a.m.
April 29, 2025
Council Chambers, 35663 Fingal Line

Attendees:	Shelley Smith	Mayor Grant Jones
	Shirley Lorch	Cathy Koyle
	Jo-Anne Cummings-Stinson	Christine McArthur
	Karen Graff	June McLarty, Staff Resource

Guest: John Price

Regrets: Shannan Worotny, Dave Nichols,

Shelley called the meeting to order at 10:31 a.m. and thanked John Price, Facilities Manager, for attending the meeting.

The agenda was approved by the committee with the additional items of the tree on Fingal Line and the flower box at the Iona village sign.

2025-05 Moved by: Grant Jones – Seconded by: Christine McArthur

RESOLVED THAT the minutes of the February 12th, 2025 meeting be approved.

Carried

Other Business

The Fire Department thanked the Committee for the treats that were delivered to the Fire Hall.

John Price advised the committee that the flower box at the Shedden south sign on Union Road will stay in place for the time being. If it is taken apart, it can be reassembled and used again.

The sign flower box that was built at the Iona village sign will remain at this location. Cathy Koyle will maintain it. A flower box for the Iona Station village sign will also be built. S&B will provide the soil, but someone needs to assist them when filling up the flower boxes.

DRAFT

There is an elm tree near the Southwold sign on Fingal Line at Iona Road that needs to possibly be removed. Southwold staff will need to examine it to determine its condition.

Due to the construction on Union Road, the step box that is normally located at the Shedden Fire Hall will be moved to be near the windmill that is located at the end of Fairground Street.

Financial Report
June provided an updated financial report for the committee.

Flags
June provided an updated price list on the costs of flags. Christine reported that the brackets for the flag poles were no longer needed.

Plant Sale
Advertising for the plant sale will include a notice on the electronic sign at the Wayside Dining Lounge, the Rosy Rhubarb sign and the library electronic sign. Flyers will also be placed around the Township.
Karen will provide a trailer for Christine to bring the plants to the complex.

The pricing for the plants will be as follows:

$3.00 for a solo cup
$4.00 for a 4 pack of vegetable plants
$5.00 for a small perennial
$8.00 for medium perennial

Popsicle sticks will be painted in different colours to indicate the various price amounts.

An inventory of plants will be taken after the sale to determine what is still needed for the containers. Committee members were asked to source some plants and pricing in case extra plants are needed.

Shelley provided a list to the committee members to coordinate with the volunteers who maintain the sign boxes to assist with the planting of those boxes. An updated volunteer list will be provided to Shannan.

Container Planting
The painting of the container will take place at Jones' residence on May 26th beginning at 9:00 am. The step boxes and their planted containers will be placed around the Township on June 3rd with assistance from Township staff.

DRAFT

Adjournment

The meeting adjourned at 12:19 p.m.
The next meeting was scheduled for Wednesday June 18th, 2025 at 10:30 a.m.

_____ _____

Shelly Smith - Chair June McLarty – Staff Resource

DRAFT

TOWNSHIP OF SOUTHWOLD

Report to Council

MEETING DATE: May 12th, 2025

PREPARED BY: Jeff McArthur, Director of Emergency Services

REPORT NO: FIR 2025-05

SUBJECT MATTER: Director of Emergency Services Activity Report - April 2025

Recommendation:

1. None – For Council Information.

Purpose:

To update Council on Fire Department Activities for April 2025.

Background:

Department updates on its activities and meeting(s) since last report:

a. *Calls for service* – a total of 26 emergencies were responded to in the month of April, including eight MVCs.

b. *Meetings* – Fire Chief attended a County Mutual Aid meeting, and several Talbotville Station site meetings.

c. *Inspections* – no new inspections conducted.

d. *Public Education* – social media, Shedden Station sign.

e. *Grants* – a small extra allocation of additional funds for the Provincial Fire Protection grant has been received. The bunker gear dryer has been delivered with spare bunker gear to be ordered.

f. *Talbotville Station Project* –the move into the new building is imminent. Sitework will be completed over the spring and summer of 2025, with a grand opening to be planned for later this year.

h. *Apparatus & Equipment* – ongoing routine maintenance including minor pumper repairs.

A pumper remains stationed in Fingal during Union Road construction, to ensure adequate and timely coverage to all areas of the Township.

Report on any outstanding/unresolved concerns, issues:

a. The Fire Chief is working with our GIS & Asset Management Coordinator on a solution to outdated mapping issues regarding fire response zones.

b. The County Fire Chiefs are discussing options regarding Hazardous Materials response agreements, as there are currently no formal agreements within Elgin County.

Training Undertaken by Staff:

a. Department training topics included incident SCBA use, hose deployment, and nozzle use.

b. Four recruits are attending the NFPA 1001 Firefighter Recruit class through the Elgin-Middlesex Regional Fire School, with department members providing instructing support.

Capital Project Progress :

2025	**Budget**	**Status/Comments**
SCBA	$26,200	Ordered
Bunker Gear	$21,000	To be ordered in the fall
Hoses & Appliances/Radios	$9,000	Ongoing
Electronic Sign – New Talbotville Station (2024 allocation)	$35,000	Planning stage
Auto Extrication Equipment	$50,000	Complete
Talbotville Fire Station	$4,500,000	In progress

Financial Implications:

None.

Strategic Plan Goals:

The above recommendation helps the Township meet the Strategic Plan Goal of:

☐ Managed Growth

☐ Welcoming and Supportive Neighbourhoods

☐ Economic Opportunity

☒ Fiscal Responsibility and Accountability

Respectfully Submitted by:
Jeff McArthur, Director of Emergency Services
Approved by:
Jeff Carswell, CAO/Clerk

TOWNSHIP OF SOUTHWOLD

Report to Council

MEETING DATE: May 12, 2025

PREPARED BY: Paul Van Vaerenbergh, Public Works Superintendent
Brent Clutterbuck, Drainage Superintendent
Mike Taylor, Manager of Environmental Services
Aaron VanOorspronk, Director of Infrastructure and Development Services

REPORT NO: IDS 2025-25

SUBJECT MATTER: Activity Report for Infrastructure and Development Team - April 2025

Recommendation:

1. None – For Council Information.

Purpose:

The purpose of the report is to update Council on the Infrastructure and Development Services team activities for April 2025.

Development:

- Ongoing support for the Talbotville Fire Station, addressing drainage issues at the Wallis Drain crossing under Sunset. The contractor will provide a quotation to complete the replacement of the crossing. This will be completed under maintenance and will require a closure of Sunset, with Talbotville Gore Road acting as the detour. The closure is targeted to last one day for installation and one day for paving.
- Bi-weekly meetings for the Shedden WWTP and a 60% comprehensive review of the system process for the new treatment facility. Supplier delays are holding up the detailed design. We expect to have the tender package ready for June, with the ECA submission planned for May. MECP has granted permission for temporary hauling to the Talbotville WWTP, up to 25 cubic metres per day, once the plant can be switched on.

- Bi-weekly and ongoing project management for the Union Road Sanitary Sewer construction. With improved weather, we expect production to pick up. We are currently working with the fire department to split truck locations and are aiming to have a slip lane constructed in the near future as ground conditions improve. Weekly updates continue to be emailed and posted.
- Coordination with the County for the Fingal Reconstruction design. A major meeting was held with the County, Township, and developers to coordinate design efforts. It is likely that the scope of the Mill Park Reconstruction will expand from Fingal Line to the park to facilitate drainage works and reduce the size of storm sewers by splitting the flow into two runs. The regional/shared SWM facility has been conceptually drawn. As a result of the meeting, several adjustments are needed before presenting the plan to Council. The footprint of the shared facility will be significant but remains entirely within underused land in Fingal Ball Park. This would bring the Township and County into compliance with our ECA for current and future stormwater projects, providing an efficient SWM maintenance and operations strategy for the Village.
- The Township's consultant is finalizing the design of the Fingal Pump Station and Forcemain. We are targeting a June tender period, with optional start dates either this year or next depending on completion before winter control. This work is mostly off-road and, with Union closed, will cause minimal disruptions. The work is reliant on ECA approval.
- Issued the Iona Road Culvert tender with a significant number of plan takers.
- Received drawings for the Lyle Bridge project. Tendering is planned for fall 2025, with construction in 2026, subject to renewed budget approval to avoid conflict with harvest traffic. Given current priorities, the project can be deferred with minimal consequences.
- Reviewed 60% drawings for the Thomas Road Reconstruction. The engineer aims to deliver a tender-ready set within the next week. Staff are encouraging tenders to go out quickly to take advantage of a lull in the market with highly competitive pricing.
- Attended the EDC meeting. We are proceeding with a conceptual redesign of the downtown corridor to support pedestrian movement, business activity, and beautification.
- Continued various land acquisition and disposal efforts. Legal is working on agreements for the shared SWM facility in Shedden, the Commercial Plaza, and the Old Firehall.

- Continued work on a shared maintenance agreement with Central Elgin for Mellor Road. The draft is with them for review. We aim to bring it before Council for adoption before the winter control season.
- Kicked off bi-weekly coordination meetings with the St. Thomas Secondary Water Board for a future shutdown to commission the new section of watermain on South Edgeware. We are working with all impacted technical and municipal agencies. Some modeling is underway to explore water hauling options to supplement the backfeed from Dutton. A comprehensive communications plan is in development and will be distributed once finalized.
- Ongoing coordination with the MTO for the closure of Ford Road and the relocation of watermains on Ford Road and Sunset Drive. A bylaw to close Ford Road will come to Council in June. Communications and notifications are proceeding in accordance with the Township's policy.
- Attended a meeting with the History Committee.
- Continued work toward completing the EA for the expansion of the Talbotville Wastewater Treatment Facility. MECP has raised concerns about the proposed treatment volumes. The Township's engineering team is addressing these concerns, which we believe are not justifiable.
- Organized the temporary relocation of water department stock to the existing Public Works Building.
- Continued coordination on the new Public Works Building. Work is progressing well, with the foundation poured and steel erection to begin mid-May.
- Participated in the review of the County Cycling and Road Rationalization plans.
- Met with the Ministry of Infrastructure regarding the HEWS Funding. We are coordinating with the County to align project timing and details for continued eligibility.
- Collaborated with Finance to submit reports for HEWSF and the Canadian Community Infrastructure Fund. This process revealed some deficiencies in our asset management records, which will need to be addressed.
- Ongoing work with the project team for the Talbotville Wastewater Facility expansion. The Township's lawyer and engineer have been onboarded. The project is currently paused while the project manager prepares financial scenarios for Council's review prior to finalizing the RFP.
- Met with auditors to review P3 delivery models and their implications on the Township's borrowing capacity.
- Directed Colliers to use remaining CHIF application assistance funds to submit a proposal for the provincial funding stream. The overlap in requirements and no change in Council-approved spending made this an advantageous opportunity.

Two challenges include aligning the AMP with 2025 targets and acquiring land for the future plant.

- Worked with legal and surveyors to submit plans for land acquisition for the Talbotville WWTP and future pumping station.
- Collaborated with developers on industrial and residential projects to expand the collection and conveyance system to bring more land online.
- Held pre-consultation meetings for Clinton Line developments (additional meeting included).
- Finalized the Site Plan Agreement for Evelyn's. The site plan is approved, and a conditional permit has been issued.
- Onboarded the County planning team; working on draft agreements for 4431 Union Road, 4400 Thomas Road, and 35743 Horton Street.
- Received a detailed submission for 4400 Thomas Road; currently completing the design review.
- Ongoing work with Central Elgin on the subdivision at 4431 Union Road and the servicing agreement. Environmental Services is reviewing operational opportunities for the pump station.
- Collaborating with the developer's engineer for 35743 Horton Street to incorporate work on the Horton Drain and grading within the current Union Road project. Reviewing the initial stormwater facility design and upgraded outlet with the LTVCA.
- Reviewed PRV chambers for Port Stanley.
- Continued work with the consultant on the Development Charges study update, including growth forecasting and the list of eligible projects. Completed the fleet inventory review for inclusion in the study. Some inconsistencies were found between the AMP and the actual inventory; however, staff remain focused on higher-priority projects. The development charges update will include recommendations from the Parks and Trails Master Plan.
- Ongoing coordination for the Parks and Trails Master Plan, including communications for the May 8 Open House. Online postings have been consistent, and posters have been placed at key Township businesses.
- Continued coordination with LTVCA on various projects.
- Coordinated block placement for Argyle Street in Iona. Tree planting is scheduled for May 8.
- Continued discussions with the Thames Valley District School Board regarding potential school locations.

- Conducted a walkthrough of Phase 1 of the Meadows subdivision to review deficiencies, including fencing. The developer plans to complete the work this spring/summer for assumption this year.
- Attended the County-wide development and planning meeting to discuss upcoming developments and changes.
- Completed staff performance reviews.
- Onboarded GIS students, who are performing well. Targets have been set to complete water, sanitary, and drainage maps for GeoHub by the end of summer.
- Held a kickoff meeting with Finance and Water staff to begin drafting a consolidated water and wastewater bylaw, titled the Integrated Water Management Bylaw. This will consolidate nearly 30 separate bylaws into one, with schedules and references for easy navigation. We aim to present this to Council by the end of June.
- Attended a community-wide meeting with the IESO to discuss their Regional Planning Study. The IESO is seeking input on community growth, decarbonization, storage, and generation capacity. Staff are working with contractors to explore future installation of EV charging stations and solar retrofits at the new Public Works Building, with potential revenue generation.
- Worked with Fire and GIS to resolve FireComms challenges.
- Continued work on various HR matters.

Total list of active subdivision/site plan files is shown below:

Development Files	New this Month	Stage of Development Process	Settlement Area
Talbotville Meadows Phase 1	Completed supplemental walkthrough	Residential build out	Talbotville
The Clearing		Working towards assumption	Talbotville
Enclave Phase 1		Residential build out almost complete, working towards request for assumption	Talbotville
Florence Court		Residential build out, working towards request for assumption	Ferndale
Talbotville Meadows Phase 2		Working towards preliminary acceptance	Talbotville
40134 Talbot Line		Site plan agreement	Talbotville
McBain Line		Draft plan, working towards engineering submission	Ferndale
35743 Horton Street (Stoss)	Worked with design team for water modelling, stormwater, drainage works and site grading activities to commence in summer	Detailed Design	Shedden
4509 Union Road (Turville)		Working towards registration of subdivision	North Port Stanley
8068 Union Road		Studies, preparing for draft plan submission	Fingal

10247 Talbotville Gore Road		Studies, preparing for site plan	Talbotville
Talbotville Meadows Blocks 177 & 178	Received signed SPA	Pre-Consultation	Talbotville
4324 Thomas Road	Resubmission of detailed design drawings	Studies, preparing for draft plan submission	North Port Stanley
7882 Union Road		Pre-Consultation	Fingal
11085 Sunset Road		Pre-Consultation	Talbotville
35556 Fingal Line		Background information	Fingal
North of 9877 Union Road		Pre-Consultation	Shedden
Teetzel Development		Background information	Shedden
8115 Union Road	Formal Pre-Consultation Meeting	Consultation	Fingal
Field north/east of John Street		Consultation	Shedden
11570 Wonderland Road (Marcel Equipment)		Construction	Talbotville
11432 Sunset Road		Pre-Consultation	Talbotville
36391 Talbot Line	Completed SPA	Construction	Shedden

Infrastructure:

a) Water and Sanitary:

- OCWA contract negotiations ongoing for water and wastewater operations. Second meeting recently took place.
- 93 locates were completed for various contractors and landowners in April. 309 locates received to date.
- Water main leak discovered in front of Southwold Public School. Staff coordinated for repair which took place in May. Implications with Elgin Manor, Royal Oak, and Southwold Public School.
- 10 existing water meters were replaced in March. 28 meters replaced to date.
- First two of five smart hydrants installed in system. 2025 capital project.
- Staff working on emptying equipment/materials from old water shop in Shedden. Temporary location of materials/equipment will be in building (old firehall) at main works yard.
- OCWA spring flushing ongoing. Will be completed in May.
- Materials ordered for chemical upgrades at wastewater treatment plant. Contractor has started work and anticipated to be operational in June. (capital project)
- Staff attended insurance inspection at wastewater treatment plant.
- Staff coordinated with OCWA and contractor for EQ headworks tanks to be cleaned in May at wastewater treatment plant.
- Coordinated and scheduled critical PRV valve replacement at John Wise Line and Fingal. PRV valve had failed and has had a history of operational problems.
- Hydrant repaired at John Wise Line and Fingal and put back into service.
- Final Reads completed.
- Building meter assemblies for new connections and repairs.
- All water system dead-ends flushed in April. First flushing for 2025.

b) Roads and Bridges:

- Gravel renewal program has begun, Oneida, McDiarmid, Begg and Mill Road have all received gravel, Oneida received dust suppression due to increased traffic. As well as other locations with new gravel in strategic locations for homeowners.
- Dust suppression program to begin in May, and wrap up in June
- Permanent patching completed at locations with hot mix asphalt using the new hot box.
- Students have come onboard to help with summer workload
- Oneida and McDiarmid are receiving increased traffic, the Roads Team is keeping a close eye on the road condition, has addressed problem areas with additional screenings and deploy the grader as needed on a day-by-day basis.

2025 Capital Project Process:

2025	Budget	Actual	Status/Comment
Water and Sewer			
Shedden Wastewater Treatment Plant			Stage 2 Arch to be completed, final design review scheduled for April 22, MECP submission targeting end of April, permission to haul to Talbotville issued by the MECP
Talbotville Wastewater Treatment Plant			Colliers writing the RFP
South Shedden Sanitary Sewers	$3,663,048.41		Construction underway, ground and weather conditions are less than ideal, resulting in a temporary full closure of Union Road
North Shedden Sanitary Sewers			Detailed Design and Geotechnical Investigations Underway
Roads			
Shady Lane Sidewalk	$15,000		To Council for Award
Edge Repairs – Scotch Line	$50,000		
Rehabilitation John Wise Line and Longhurst Line	$900,000	$817,658	Awarded Construction Underway, Paving Scheduled End of May
Scotch Line Resurfacing	$175,000		Awarded
Thomas Road Construction	$2,060,000		60% Submission Review Complete, awaiting Tender Package
Bush Line Rehabilitation	$150,000		Awarded

Public Works Building	$4,800,000		Footings poured, wall pours under way, steel erection scheduled for mid-May
Bridges/Culverts			
Scotch Line Culvert Replacement	$450,000		Detailed Design Underway
Lyle Bridge Rehabilitation	$200,000		Consultant completing deck investigation
Iona Road Culvert Replacement	$30,000		To Council for Award

c) Drainage:

Drains Before Council:

Construction:

- **Gregory Drainage Works (2023)**: Under construction, County crossing and associated road works will start probably sometime in May after the asphalt plants open.
- **Taylor Drain:** Robinson Farm Drainage awarded contract. The encroachment permit to work within the 401 right of way has been received from MTO. Construction is planned for this summer or fall
- **Ryan Drain (Sept 19):** T. We are no waiting for the completion certificate from the developers engineer to confirm that the drain has been constructed as designed. Once the certificate is received Council will finally pass the by-law

With the Engineer:

- **Best Drain (2024)** Meeting to review the proposal of the engineer was held April 16th. The Engineer was asked to look at some other options and provide costing to landowners
- **Bowlby Futcher Drain (2024)** Meeting to review the proposal of the engineer arranged for June 3rd
- **Jones Drain (2024)**
- **Edison Drain (2024)**

For the other three above drains, meetings to review the proposal of the engineer will be arranged in the next few months.

- **Third Line – Magdala Drain (formerly Con 3, Lot 5 Drain): (June 12)**: Council returned to Engineer.

- **Bogart Drain Ext. (Dec 15):** The proponent has asked that this drain be put on hold for the time being.

- **Maintenance:** Work being assigned to contractors as requests coming in. Drainage Superintendent has been out in the field looking at maintenance requests, reviewing contractor work and fielding landowner questions.

Conference/Training:

2024 Capital Project Process:

Gregory Drainage Works – Special Assessment waterline	$27,800
Gregory Drainage Works –Boxall Road	$389.00
Taylor Drain – 4th Line	$664.00

Financial Implications:

None.

Strategic Plan Goals:
The above recommendation helps the Township meet the Strategic Plan Goal of:

☐ Managed Growth

☐ Welcoming and Supportive Neighbourhoods

☐ Economic Opportunity

☒ Fiscal Responsibility and Accountability

Respectfully Submitted by:
Infrastructure and Development Services Team

Approved by:
Jeff Carswell, CAO/Clerk

TOWNSHIP OF SOUTHWOLD

Report to Council

MEETING DATE: May 12th, 2025

PREPARED BY: Aaron VanOorspronk, Director of Infrastructure and Development Services

REPORT NO: IDS 2025-26

SUBJECT MATTER: Shady Lane Sidewalk Award

Recommendations:

1. That Council award construction of the Shady Lane Sidewalk to DPA Contracting Ltd. in the amount of $22,344.50 plus HST.

2. THAT Council approve a contingency allowance of $5,000.

Purpose:

To seek Council approval for the award of a contract to construct a connecting sidewalk from the Meadows Subdivision to Shady Lane.

Background:

As part of the 2025 Capital Budget, Council approved $15,000 for the construction of a formal, AODA-compliant sidewalk link from the Meadows Subdivision to Shady Lane. This new sidewalk will replace an informal, worn "goat path," providing safe and accessible pedestrian access for Shady Lane residents to nearby destinations, including the Talbotville Optimist Parks.

Comment/Analysis:

Staff solicited quotations from three local contractors in the London area. Two contractors submitted bids, as summarized below:

	Bidder	Total Contract Price (excluding HST)
1	DPA Contracting Ltd.	$ 22,344.50
2	Ro-Buck Contracting Ltd.	$ 31,067.00

The lowest bid exceeded the original budget of $15,000, which had been based on unit rates from previous sidewalk projects. However, during a debriefing with the low bidder,

it was noted that site access constraints significantly impacted the cost. Unlike typical sidewalk installations adjacent to roadways, this off-road location requires either hand-carting concrete or the use of a pump truck to transport material to the prepared forms, increasing both labour and equipment costs.

Given these challenges, staff recommend awarding the contract to DPA Contracting Ltd. Despite the increased cost, market conditions—such as reduced demand for private-sector construction—have led to highly competitive pricing. It is unlikely that rebidding the project in future years would result in lower costs, particularly if market conditions change.

Financial Implications:

If awarded, the project will be funded through the sidewalk reserve, with an increased total budget of $27,344.50. This includes a $5,000.00 contingency to account for potential quantity overruns or unforeseen site conditions. While the risk of needing the contingency is considered low, differences between estimated and actual quantities justify its inclusion.

Strategic Plan Goals:

The above recommendation helps the Township meet the Strategic Plan Goal of:

☒ Managed Growth

☐ Welcoming and Supportive Neighbourhoods

☐ Economic Opportunity

☒ Fiscal Responsibility and Accountability

Respectfully Submitted by:
Aaron VanOorspronk, LET.
Director of Infrastructure and
Development Services

Approved by:
Jeff Carswell, CAO/Clerk

TOWNSHIP OF SOUTHWOLD

Report to Council

MEETING DATE: May 12, 2025

PREPARED BY: Aaron VanOorspronk, Director of Infrastructure and Development Services

REPORT NO: IDS 2025-27

SUBJECT MATTER: Iona Road Culvert Award

Recommendations:

1. That Council award construction of the Iona Road Culvert to Clarke Construction Inc. in the amount of $179,000.00 plus HST.

2. That Council approve a contingency allowance of $20,000.

Purpose:

To seek Council approval for the award of a contract to replace the Iona Road Culvert south of Fingal Line.

Background:

As part of the 2025 Capital budget, Council approved $150,000 from the Bridge and Culvert Reserve and $30,000 from the Water Reserve for the replacement of a culvert on Iona Road that has reached the end of its useful life. In early 2024 Iona Road at this culvert suffered a washout and sinkhole generated from a joint failure in the culvert that created a washing effecting, slowly eroding the road structure until it failed. Township road crews completed a temporary repair, but additional inspection of the culvert revealed that the remainder of the culvert was at risk of imminent failure. This culvert is a jointly owned asset, as Iona Road serves as the boundary between Dutton Dunwich and the Township. Dutton Dunwich has identified funds totalling $90,000 for engineering and construction within their budget to complete the replacement.

Comment/Analysis:

Tender PW 2025-003 was posted on the Township's electronic bid portal on April 17, 2025, and closed on May 8, 2025. Eleven bids were received, summarized below.

	Bidder	Total Contract Price (excluding HST)
1	Clarke Construction Ltd.	$ 179,000.00
2	Cope Construction & Contracting Ltd.	$ 196,145.00
3	Gillier Construction Inc.	$ 210,000.00
4	RRC Construction	$ 217,625.73
5	Murray Mills Excavating	$ 221,000.00
6	Aar-Con Excavating	$ 225,037.05
7	All Season Excavating	$ 236,840.00
8	Master Utility Division Inc.	$ 237,910.90
9	ghn Group	$ 368,234.80
10	Oakbridge Construction Inc.	$ 397,812.46
11	Lancoa Contracting Inc.	$ 456,377.00

The lowest bid, when a project contingency and net HST are included exceeds the budget value of $180,000. Based on the high interest in the project, this represents a highly competitive process and represents good value.

Dutton Dunwich carried $90,000 in their capital budget for this project, given that their representative portion exceeds this budget, as well as a courtesy measure, staff will circulate this report to Dutton staff for Dutton Dunwich Council consideration.

Financial Implications:

The following breakdown summarizes the costs and funding sources from the different reserves the project will be drawing on.

	Expenditures	Southwold Portion	Funding
Engineering and Inspection	$ 20,250.24	$ 10,125.12	$10,125.12
Bridge and Culvert	$ 160,700.00	$ 80,350.00	$75,000
Water Reserve	$ 18,300.00	$ 18,300.00	$30,000

Contingency from Water or Bridge Depending on Cause	$ 20,000	$ 10,000	
Totals	$ 219,250.24	$ 118,775.12	

*Includes costs for Engineering, construction allocation was $75,000

Staff reviewed the status of the Bridge and Culvert Reserve, there are sufficient funds to absorb the increased cost, if the project proceeds. Upon completion of the project staff will invoice the Municipality of Dutton Dunwich a 50% share in the engineering and construction costs for the culvert, estimated at $100,475.12, based on bid pricing and full utilization of the contingency.

Strategic Plan Goals:

The above recommendation helps the Township meet the Strategic Plan Goal of:

☒ Managed Growth

☐ Welcoming and Supportive Neighbourhoods

☐ Economic Opportunity

☒ Fiscal Responsibility and Accountability

Respectfully Submitted by:
Aaron VanOorspronk, LET.
Director of Infrastructure and
Development Services

Approved by:
Jeff Carswell, CAO/Clerk

TOWNSHIP OF SOUTHWOLD
Report to Council

MEETING DATE: May 12th, 2025

PREPARED BY: Brittany Jessome, Community Services & Communications Clerk & Corey Pemberton, Director of Building and Community Services

REPORT NO: CBO 2025-11

SUBJECT MATTER: Committee Representation of Corsley Park

Recommendations:

1. That Corsley Park be defined as the area beginning at the walking trailhead at Fairground Street, extending south to include the entirety of the Corsley Park facilities.

2. That full responsibility for Corsley Park be assigned to the Parks Committee, thereby removing it from the purview of the Shedden Recreation and Keystone Complex Committee.

3. That Shedden Soccer representatives be removed from the Shedden Recreation and Keystone Complex Committee, as appointed through By-law No. 2025-13.

4. That Council rename the Shedden Recreation and Keystone Complex Committee to Keystone Complex Committee.

5. That the same Council representative and Township staff representative be appointed to both the Keystone Complex Committee and the Parks Committee.

Purpose:
To obtain Council's approval of the committee restructuring recommendations put forward by the Parks Committee and the Shedden Recreation and Keystone Complex Committee.

Background:
The Parks Committee and the Shedden Recreation and Keystone Complex Committee assist Council in the following ways:

a. To assist Council with identifying recreation needs within the community and recommending programs to fulfill these needs;

b. Monitor recreational activities and report on all activities through the minutes of their meetings;

c. The Committees, with the assistance of members and volunteers, will undertake and promote fundraising and donation programs to the best of their ability. Such programs may be for general operating assistance or special programs/capital projects approved by Council;

d. Prepare and submit a recommended proposed annual operating and capital budget;

e. Recommend to Council the appointments of Committee Members and the formation and make up of any Sub Committee;

f. Provide minutes of the Committee meetings to be circulated to Council for their review in a timely manner.

The Committees are comprised of council members, representatives from local user groups, and staff resources.

At the Parks Committee meeting on March 20, 2025, discussion of a memorial bench placement at Corsley Park highlighted overlapping committee representation. It was agreed that as a park facility, Corsley Park should fall solely under the responsibility of the Parks Committee.

A subsequent staff review further identified a need to clarify and streamline the committees' roles and responsibilities, as outlined below.

Comment/Analysis:

Corsley Park was constructed in 2018 and opened in 2019 but became fully operational in 2021 following COVID-19 restrictions. A walking trail was constructed to connect the Keystone Complex to Corsley Park, serving as a direct pedestrian access route. Given this, it is reasonable to include the trail as part of Corsley Park.

As recreational programming has moved away from the Keystone Complex to Corsley Park, it is appropriate for the Parks Committee to take on full responsibility for Corsley Park facilities. This transition would ensure clear oversight and eliminate redundancy in committee representation.

Currently, Shedden Soccer has representatives on both committees. Given the committee realignment and the relocation of soccer activities to Corsley Park, it is appropriate to remove Shedden Soccer representation from the Keystone Complex Committee. The current Shedden Soccer representatives on the Parks Committee will continue to serve in their roles.

With this change, all recreational programming and facilities would be under the direction of the Parks Committee. It is then appropriate to remove "Shedden

Recreation" from the name of the Shedden Recreation and Keystone Complex Committee. The revised title, Keystone Complex Committee, more accurately represents the committee's scope and responsibilities.

The above recommendations have been reviewed by both the Shedden Recreation Committee and the Keystone Complex Committee, and both committees agree with the proposed changes. The Keystone Complex Committee has additionally requested that the same member of Council and the same Township representative be appointed to both committees to ensure consistency in representation and alignment of goals.

Financial Implications:
There are no financial considerations involved

Strategic Plan Goals:

The above recommendation helps the Township meet the Strategic Plan Goal of:

☐ Managed Growth

☒ Welcoming and Supportive Neighbourhoods

☐ Economic Opportunity

☒ Fiscal Responsibility and Accountability

Prepared by:
Brittany Jessome, Community Services & Communications Clerk

Submitted by:
Corey Pemberton, Director of Building and Community Services

Approved by:
Jeff Carswell, CAO/Clerk

TOWNSHIP OF SOUTHWOLD

Report to Council

MEETING DATE: May 12th, 2025

PREPARED BY: Corey Pemberton, Director of Building & Community Services

REPORT NO: CBO 2025-12

SUBJECT MATTER: Director of Building & Community Services Activity Report - April 2025

Recommendation:

1. None – For Council Information.

Purpose:

The update Council on monthly activities since last report.

Background:

1. **2023/2025 Capital Project Process:**

2023		
Projects	**Budget**	**Status/Comment**
Parks		
Corsley Park parking lot widening	$10,000.00	
Dog waste bins and signage	$2000.00	
Park benches	$16,000.00	Ongoing
2025		
Township Office		
Security Upgrades	$40, 000	Quote received installation pending
Parks		
Walking trails conversion to concrete	$5,000.00	
Lawnmower	$30,000.00	Received
Parks and Trails Master Plan – funded through Green Lane Community Trust Fund	$47,600.00	
Corsley Park sanitary Connection	$30,000.00	

Comments/Analysis Building:

See Schedule "A" attached, the Permit Comparison Report.

Strategic Plan Goals:

The above recommendation helps the Township meet the Strategic Plan Goal of:

☐ Managed Growth

☐ Welcoming and Supportive Neighbourhoods

☐ Economic Opportunity

☒ Fiscal Responsibility and Accountability

Respectfully Submitted by:
Corey Pemberton,
Director of Building and Community Services

Approved by:
Jeff Carswell, CAO/Clerk

TOWNSHIP OF Southwold

Township of Southwold

Permit Comparision Summary

Issued For Period April 2025

Current Year to Date 2025				Previous Year to Date 2024			
PERMIT CATEGOTY	PERMIT COUNT	FEE	COST OF CONSTRUCTION	PERMIT CATEGORY	PERMIT COUNT	FEE	COST OF CONSTRUCTION
Accessory structures	3	549	350,000	Accessory structures	7	1,162	366,300
Agricultural	1	13,750	1,700,000	Agricultural	4	2,201	680,422
Change of Use				Change of Use			
Commercial				Commercial	1	5,798	483,212
Demolition	4	600	75,000	Demolition	2	450	30,000
Heating				Heating			
Industrial Building	3	1,520	349,999	Industrial Building			
institutional Building				institutional Building			
Miscellaneous				Miscellaneous			
Plumbing	3	450	17,500	Plumbing	2	150	8,500
Pools	1	375	50,000	Pools	2	300	97,000
Residential Building	8	18,831	5,549,600	Residential Building	13	18,146	4,656,676
Sewage System	5	2,000	94,400	Sewage system	4	1,000	89,000
Signs	1	150	5,000	Signs			
Combined Use				Combined Use			
TOTAL	29	38,225	8,191,499	TOTAL	35	29,207	6,411,110

Current Year				Previous Year			
TOTAL PERMIT ISSUED		29			35		
TOTAL DWELLING UNITS CREATED		13			9		
TOTAL PERMIT VALUE		8,191,499			6,411,110		
TOTAL PERMIT FEE		38,225			29,207		
TOTAL INSPECTION COMPLETED(YTD)		333			586		

April 2024 Compared to April 2025							
Current Year				Previous Year			
	PERMIT COUNT	FEE	COST OF CONSTRUCTION		PERMIT COUNT	FEE	COST OF CONSTRUCTION
Accessory structures	1		225,000	Accessory structures	2	3,170	209,000
Agricultural	1	13,750	1,700,000	Agricultural		1,300	
Change of Use				Change of Use			
Commercial				Commercial			
Demolition	4	600	75,000	Demolition			
Heating				Heating			
Industrial Building				Industrial Building			
institutional Building				institutional Building			
Miscellaneous				Miscellaneous			
Plumbing	1	150	8,000	Plumbing	1	150	5,000
Pools	1		50,000	Pools			
Residential Building	2	150	801,000	Residential Building	3	1,422	900,000
Sewage System	2	1,000	35,000	Sewage System	2	1,500	44,000
Signs				Signs			
Combine Use				Combined Use			
TOTAL	12	15,650	2,894,000	TOTAL	8	7,542	1,158,000

TOWNSHIP OF SOUTHWOLD

Report to Council

MEETING DATE: May 12th, 2025

PREPARED BY: Corey Pemberton Director of Building and Community Services

REPORT NO: CBO 2025-13

SUBJECT MATTER: Keystone Complex Electronic Sign

Recommendations:

1. That the proposal submitted by Gould Signs in the amount of $39,240.00 plus HST be accepted.

2. That Council approve the Township's contribution of 50% of the total cost pending receiving the user groups portion of the remaining 50% of the cost.

Purpose:

This report seeks Council's award of the Keystone Complex Sign to Gould Signs.

Background:

Through the budget process Council approved contributing 50% of the cost of a new electronic messaging sign at the Keystone Complex.

Comment/Analysis:

Last year, the user groups of the Keystone Complex including Rosy Rhubarb, the Shedden Tractor Pull, and the Shedden Agricultural Society approached staff with a proposal for a new electronic sign. Following discussions with the groups and Council, it was agreed to move forward with the project, with the understanding that the user groups would contribute 50% of the cost and the Township would cover the remaining 50%. The groups submitted two quotes, and staff obtained a third quote, as outlined in the chart below. Gould Signs provided the lowest quote. It should be noted that the submitted quotes do not include the necessary upgrades to the electrical supply, which will incur additional costs. Attached as Schedule "A" is the conceptual drawing from Gould Signs. The one change that would need to be made on the sign is the Township of Southwold be switched to Elgin County along the bottom part of the sign.

	Bidder	Total Contract Price (excluding HST)
1	Gould Signs	$39,240.00
2	Excellent Sign Group	$49,929.40
3	McBain Signs	$63,806.00

Financial Implications:

The user groups will contribute 50% of the cost upfront, while the Township's 50% share will be funded through the Keystone reserves. It is important to note that the quoted price does not include the cost of the required electrical supply upgrades, which will be an additional expense.

Strategic Plan Goals:

The above recommendation helps the Township meet the Strategic Plan Goal of:

☒ Managed Growth

☐ Welcoming and Supportive Neighbourhoods

☒ Economic Opportunity

☒ Fiscal Responsibility and Accountability

Respectfully Submitted by:
Corey Pemberton Director of Building and Community Services

Approved by:
Jeff Carswell, CAO/Clerk

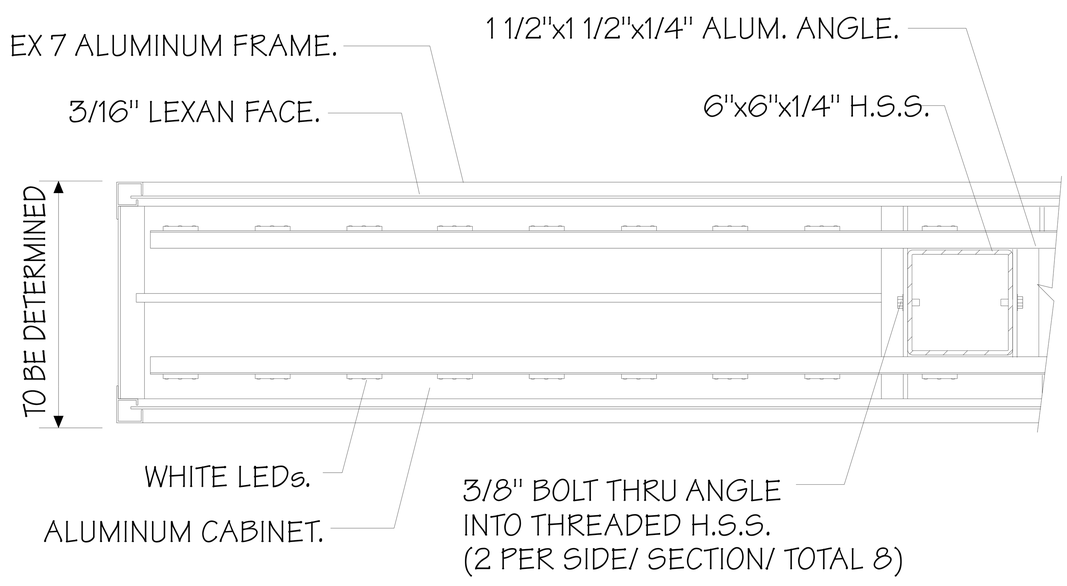

SECTION A

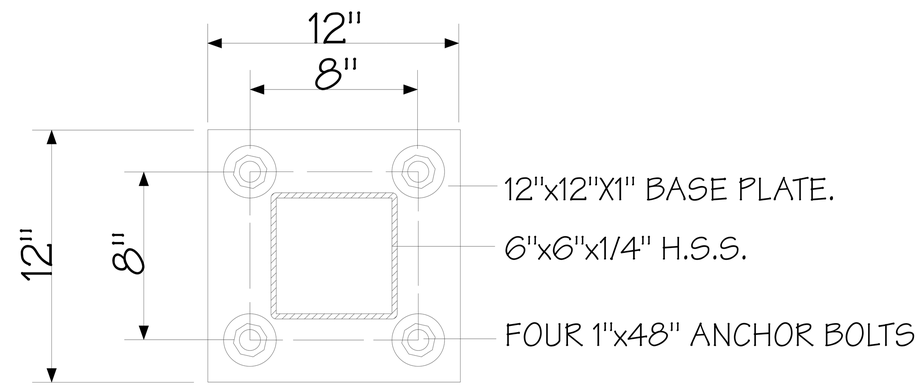

BASE PLATE DETAIL

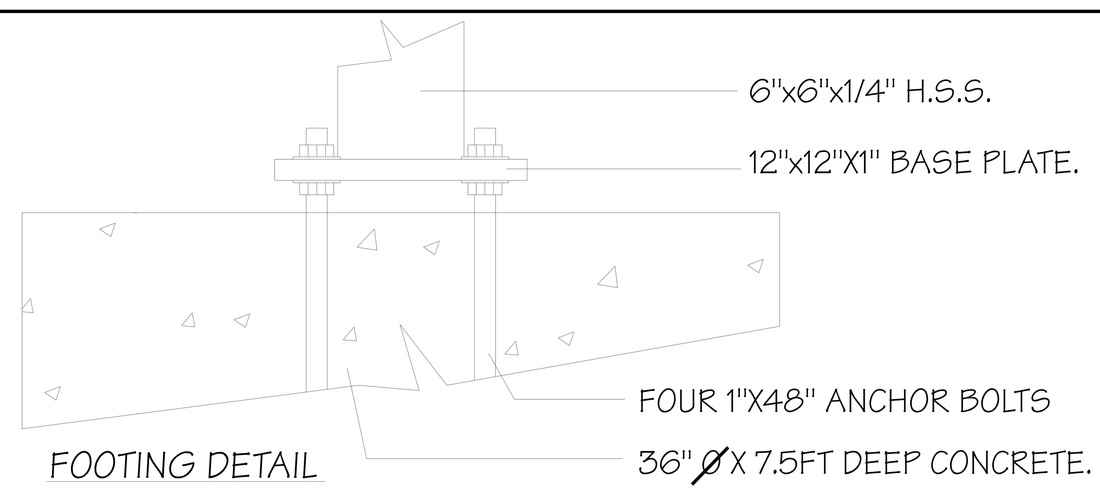

FOOTING DETAIL

- LOGO TO BE DIGITAL PRINTED IN COLOUR.
- COPY "KEYSTONE COMPLEX & LIBRARY" TO BE WHITE ON A PANTONE #5467 C. (RGB: R16, G44, B42)
- BACKGROUND TO BE DUSK PANTONE #7721 C (RGB: R27, G104, B103)
- SUB-COPY TO BE PANTONE 5467 C (RGB: R16, G44, B42) ON A WHITE BACKGROUND.

- MESSAGE CENTRE TO BE DOUBLE SIDED GSH6H OUTDOOR, P6.7, 7500 NITS, FULL COLOUR, RESOLUTION 144Hx288W, 110V/22.9A. MAX. (BY GREENTAK)
- EX 7 FRAME, CABINET & POLE ENCLOSURE TO BE PAINTED TO MATCH SLATE PANTONE #5487 C.

Gould Signs Corporation
EXTERIOR SIGN SYSTEMS
1285 HUBREY RD., UNIT 5, LONDON, ON
519.681.1520
519.681.1522

PROJECT: SOUTHWOLD
RE: KEYSTONE COMPLEX
LOCATION: 35904 TALBOT LINE.
ELGIN COUNTY RD 3, SHEDDEN, ONT.

DATE: APRIL 24/25

FOLDER: SOUTHWOLD

DRAWING #: C25-039

DETAILS:
* TO SUPPLY & INSTALL ONE DOUBLE SIDED ALUMINUM SIGN W/ TOP SECTION TO HAVE LEXAN FACES, BOTTOM SECTION TO BE COLOURD MESSAGE CENTRE.
* TOP SECTION TO BE INTERNALLY ILLUMINATED USING WHITE LEDs.
* BOTTOM SECTION TO BE GSH6R, OUTDOOR, P6, 6500 NITS, FULL COLOUR MESSAGE CENTRE. (BY GREENTAK)
* COLOURS & COPY AS INDICATED.
* TAKE SITE CHECK OF INSTALL AREA

#	REVISION	DATE

ILLUMINATED SIGN DESIGN TO COMPLY WITH ILLUMINATION DETAILS IN SECTION 4.3 CITY OF LONDON SIGN BYLAW S.-5868-183 MAY 30 2017

APPROVED BY:
FOR PRODUCTION _____

gould@bellnet.ca
gouldsignscorp.com

SERVICE & INSTALLATION

3M Authorized Manufacturer Commercial Graphics

OUTDOOR L.E.D. MESSAGE DISPLAYS

UL LISTED

This artwork is copyrighted and owned by Gould Signs Corporation. This work may not be produced in whole or in part in any material form nor may any other use inconsistent with the copyright be made of the work.

TOWNSHIP OF SOUTHWOLD
Report to Council

MEETING DATE: May 12, 2025
PREPARED BY: Jeff Carswell, CAO/Clerk
REPORT NO: CAO 2025-30
SUBJECT MATTER: CAO/Clerk Activity Report - April 2025

Recommendation:

1. None – For Council Information.

Purpose:

To update Council on the CAO/Clerk Activities for April 2025.

Meetings/Events:

April was a very busy month with over 50 meetings in the calendar. In an effort to streamline creation of this report, an attempt to export meeting information including dates and times was completed. While successful, many meetings that are not of a public nature would have to be removed. Manual creation of the listing is very time consuming. Following are several highlights from April:

- Biweekly Senior Management and Staff Meetings
- Budget Breakfast with all staff
- Southwold EDC Meeting
- Various Development Meetings
- Talbotville WWTP meetings with Colliers, Stantec, MECP
- Water/Wastewater Grant Webinars
- H&S Service Providers
- County of Elgin – Development Information Group
- Development Charges Background Study Meetings
- Auditor Meeting

Recruitment/Staffing:

Summer student recruitment is complete. The compliment for 2025 consists of the following positions – GIS (2), Parks (2) and Roads (2). Most students started April 28th. Staff have proceeded with recruitment for the Public Works vacancy.

Grant Application Progress and Updates:

The municipality was successful on the following grant applications for 2024. As new applications are submitted for 2025, they will be added to this list:

- Community Emergency Management Preparedness Grant – New Generator and Portable Radios – *SUCCESSUL – Funding of $50,000.00*
- Fire Marshal's Public Fire Safety Council – New Smart Boards for Fire Halls - SUCCESSFUL – *Funding of $1,950.03*
- Enabling Housing Water Systems Fund Grant – *SUCCESSFUL* –Signed Transfer Payment Agreement for $27.8 Million for Shedden & Fingal Sanitary Servicing
- Fire Protection Grant – *SUCCESSFUL* – Transfer Payment Agreement on Agenda for January 13th meeting.
- Community Sport and Recreation Infrastructure Grant – *Application Submitted – waiting for notification*
- Flood Hazard and Identification Mapping Program – *Application Submitted by LVTCA with Southwold support*
- Intact Municipal Climate Resiliency Grants Program – *Application Submitted*
- Ontario Trillium Foundation – Fingal Park Trail Improvements - *Application Submitted*
- Canada Housing Infrastructure Fund (CHIF) – Talbotville Wastewater Treatment Plant – *Application Submitted with assistance from Colliers*
- Municipal Housing Infrastructure Program – Health and Safety Water Stream (MHIP-HSWS) – Provincial CHIF Stream – Talbotville Wastewater Treatment Plant – *Application will be based on Federal CHIF - Application being submitted by Colliers – budget was available from prior CHIF*

Shared Services

Planning services from the County of Elgin started at the end of April. County staff will typically be in the Fingal Office on Mondays, but residents can meet with them on other days at the County building. Staff are available to Southwold every day. We are still

sorting out processes and "who does what", but so far everything is moving forward relatively smoothly.

West Elgin has had some questions about the building services agreement and proposed cost increase for 2025. We have reviewed the proposed rates and provided extensive information about rationale and justification. From our understanding, they are very pleased with the service provided. We are waiting to see if they need more information or have other suggestions with respect to rates.

Policy Development

Policies and procedures are at various stages of development and will be brought forward for approval when ready. While most are updates and improvements to existing policies, it is important to have these updated to ensure clarity to residents, developers, facility users and staff. In addition to policy development, additional time and resources need to be allocated to the rolling the policies out, staff training and documentation related to implementation. For HR and H&S Policies training and documentation is very important and an area that needs additional attention.

2025 Budget and Projects:

Staff are continuing to plan out and implement the various projects and programs approved in the 2025 budget. Several projects from 2024 remain in progress.

Project	Budget	Status/Comments
Carried forward from 2024		
Laserfiche Accounts Payable Workflow	$20,000	RICOH has started development. Workflow roll out anticipated in March/April 2025.
HR / H&S Policy and Program Updates/Improvements	$5,000	In progress with internal resources only so far. Additional resources and effort are needed to move this project forward. Options are under review.
2025		
Website Hosting – Forced Update	$11,000	Existing website providing is indicating the need to upgrade to the newest platform – impact and alternatives being investigated

Project	Budget	Status/Comments
Council Chamber Renewal	$20,000	Project scope and tasks to be determined

Strategic Plan Goals:

The above recommendation helps the Township meet the Strategic Plan Goal of:

☐ Managed Growth

☐ Welcoming and Supportive Neighbourhoods

☐ Economic Opportunity

☒ Fiscal Responsibility and Accountability

Respectfully Submitted by:
Jeff Carswell, CAO/Clerk

WESTERN ONTARIO
WOWC
WARDENS CAUCUS

WESTERN ONTARIO MUNICIPAL CONFERENCE

October 17, 2025 | London, ON

Powering Ontario's Economic Engine

The Western Ontario Wardens' Caucus presents the *Western Ontario Municipal Conference 2025: Powering Ontario's Economic Engine*, with a goal of providing relevant, dynamic programming and opportunities to share knowledge and best practices to enhance opportunities and successes, along with many opportunities for networking.

Friday, October 17th, 2025

8:30 am - 4:00 pm

Lamplighter Inn & Conference Centre, London, ON

A Welcome Reception will take place at the Lamplighter Inn & Conference Centre on Thursday, October 16th from 6:00 PM – 8:00 PM, hosted by Middlesex County.

Join us for an evening of food, drinks, and entertainment, and enjoy the perfect opportunity to connect with fellow attendees before the main conference begins. No need to make dinner reservations—there will be plenty to eat and a great atmosphere for mingling and conversation.

Early bird pricing available until August 31, 2025.

From: Delegations (MMAH) <Delegations@ontario.ca>
Sent: Thursday, May 1, 2025 11:13 AM
Subject: 2025 Association of Municipalities of Ontario (AMO) Live Form

Hello

We'd like to inform you that the Municipal Delegation Request Form for the 2025 Association of Municipalities of Ontario (AMO) Annual Conference is now available: Single Delegation Submission Form

The request form will also be posted on AMO's website. You can select either French or English using the global icon in the top right corner of the form. The deadline for submitting requests is **Friday May 30th, at 5:00 PM EST.**

Thank you!

Bonjour

Nous souhaitons vous informer que le formulaire de demande de délégation municipale pour le congrès annuel 2025 de l'Association of Municipalités of Ontario (AMO) est maintenant disponible: Single Delegation Submission Form

Le formulaire de demande sera aussi affiché sur le site Web de l'AMO. Vous pouvez sélectionner le français ou l'anglais au moyen de l'icône de globe située dans la partie supérieure droite du formulaire. La demande doit être envoyée au plus tard, **le Vendredi 30 mai, à 17 h 00 (HNE).**

Merci

THE CORPORATION OF THE TOWNSHIP OF SOUTHWOLD

BY-LAW NO. 2025-32

Being a By-Law to repeal By-law No. 1996-18, being a By-law to License and Regulate Mobile Food and Refreshment Vendors

WHEREAS Section 11(2) of the Municipal Act, 2001, S.O. 2001, c. 25, as amended, authorizes municipalities to pass by-laws respecting business licensing and regulation within the municipality;

AND WHEREAS Section 151 of the Municipal Act, 2001, provides that a municipality may provide for a system of licenses with respect to a business and may, among other things, prohibit the carrying on or engaging in the business without a license, and impose conditions as a requirement of obtaining, continuing to hold, or renewing a license;

AND WHEREAS the Council of the Corporation of the Township of Southwold deems it expedient to repeal By-law No. 1996-18, being a by-law to license and regulate mobile food and refreshment vendors;

NOW THEREFORE THE COUNCIL OF THE CORPORATION OF THE TOWNSHIP OF SOUTHWOLD ENACTS AS FOLLOWS:

1. That By-law No. 1996-18, entitled "A By-law to License and Regulate Mobile Food and Refreshment Vendors," and all amendments thereto, are hereby repealed in their entirety.

2. This by-law shall come into force and take effect on the date of its passing.

READ A FIRST AND SECOND TIME, CONSIDERED READ A THIRD TIME AND FINALLY PASSED THIS 12TH DAY OF MAY, 2025.

_____
Mayor
Grant Jones

_____
CAO/Clerk
Jeff Carswell

THE CORPORATION OF THE TOWNSHIP OF SOUTHWOLD

BY- LAW NO. 2025-33

Being a by-law to confirm the resolutions and motions of the Council of the Township of Southwold, which were adopted on May 12, 2025.

WHEREAS Section 5(3) of the Municipal Act, 2001, Chapter 25, provides that a municipal power, including a municipality's capacity, rights, powers and privileges under section 8, shall be exercised by by-law unless the municipality is specifically authorized to do otherwise;

AND WHEREAS it has been expedient that from time to time, the Council of the Corporation of the Township of Southwold should enact by resolution or motion of Council;

AND WHEREAS it is deemed advisable that all such actions that have been adopted by a resolution or motion of Council only should be authorized by By-law;

NOW THEREFORE THE COUNCIL OF THE CORPORATION OF THE TOWNSHIP OF SOUTHWOLD ENACTS AS FOLLOWS:

1. That the actions of the Council of the Township of Southwold at the Regular Meeting of Council held on May 12, 2025; in respect to each report, motion, resolution or other action passed and taken by the Council at its meetings, is hereby adopted, ratified and confirmed, as if each resolution or other action was adopted, ratified and confirmed by its separate by-law.

2. That the Mayor and the proper officers of the Corporation are hereby authorized and directed to do all things necessary to give effect to the said action, or obtain approvals, where required, and, except where otherwise provided, the Mayor and the Clerk are hereby directed to execute all documents necessary in that behalf and to affix the Corporate Seal of the Township of Southwold to all such documents.

READ A FIRST AND SECOND TIME, CONSIDERED READ A THIRD TIME, AND FINALLY PASSED THIS 12th DAY OF MAY, 2025.

Mayor
Grant Jones

CAO/Clerk
Jeff Carswell